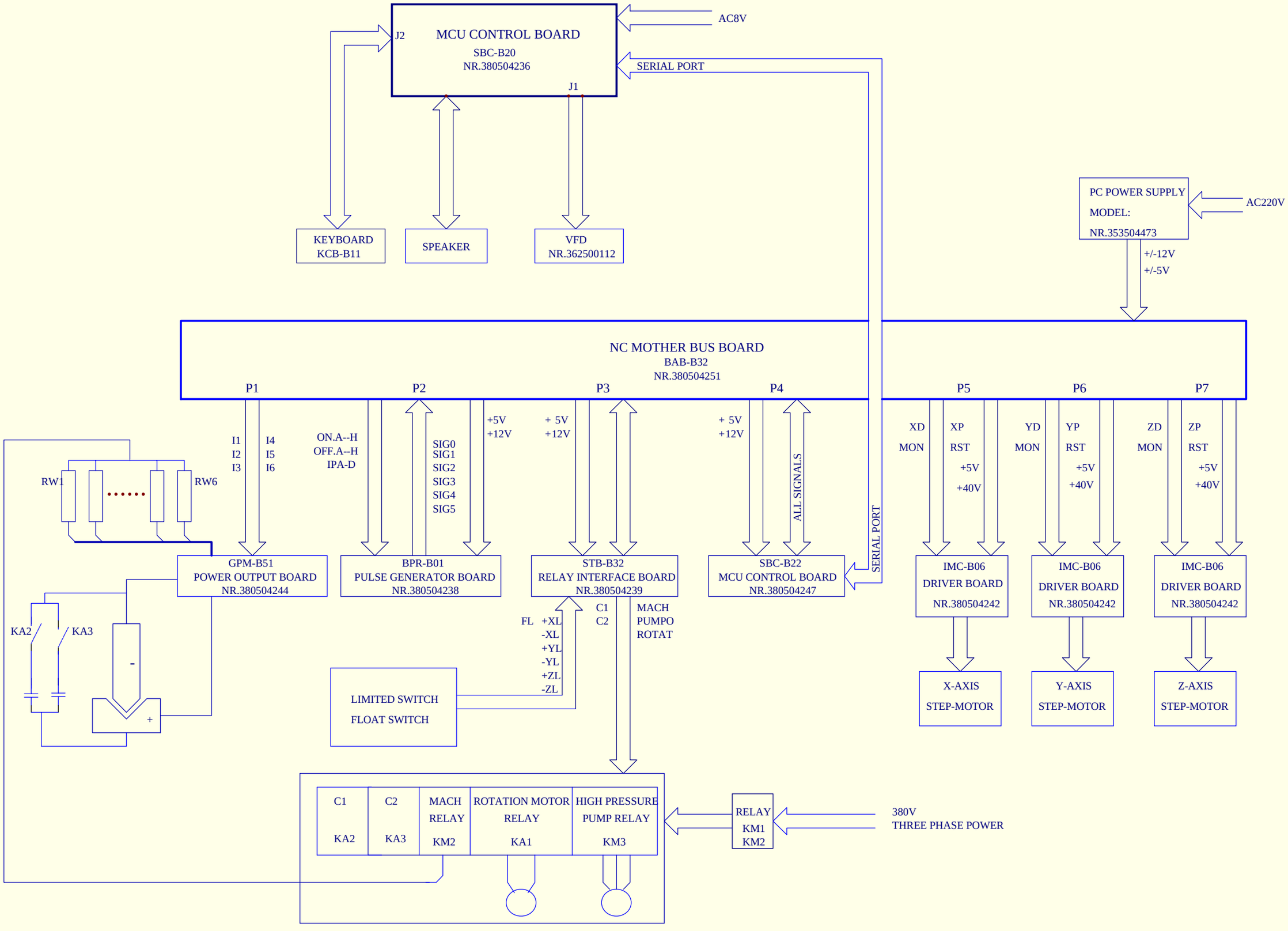

Name	System block diagram	Page
SD1 Series Circuit Diagram		AI

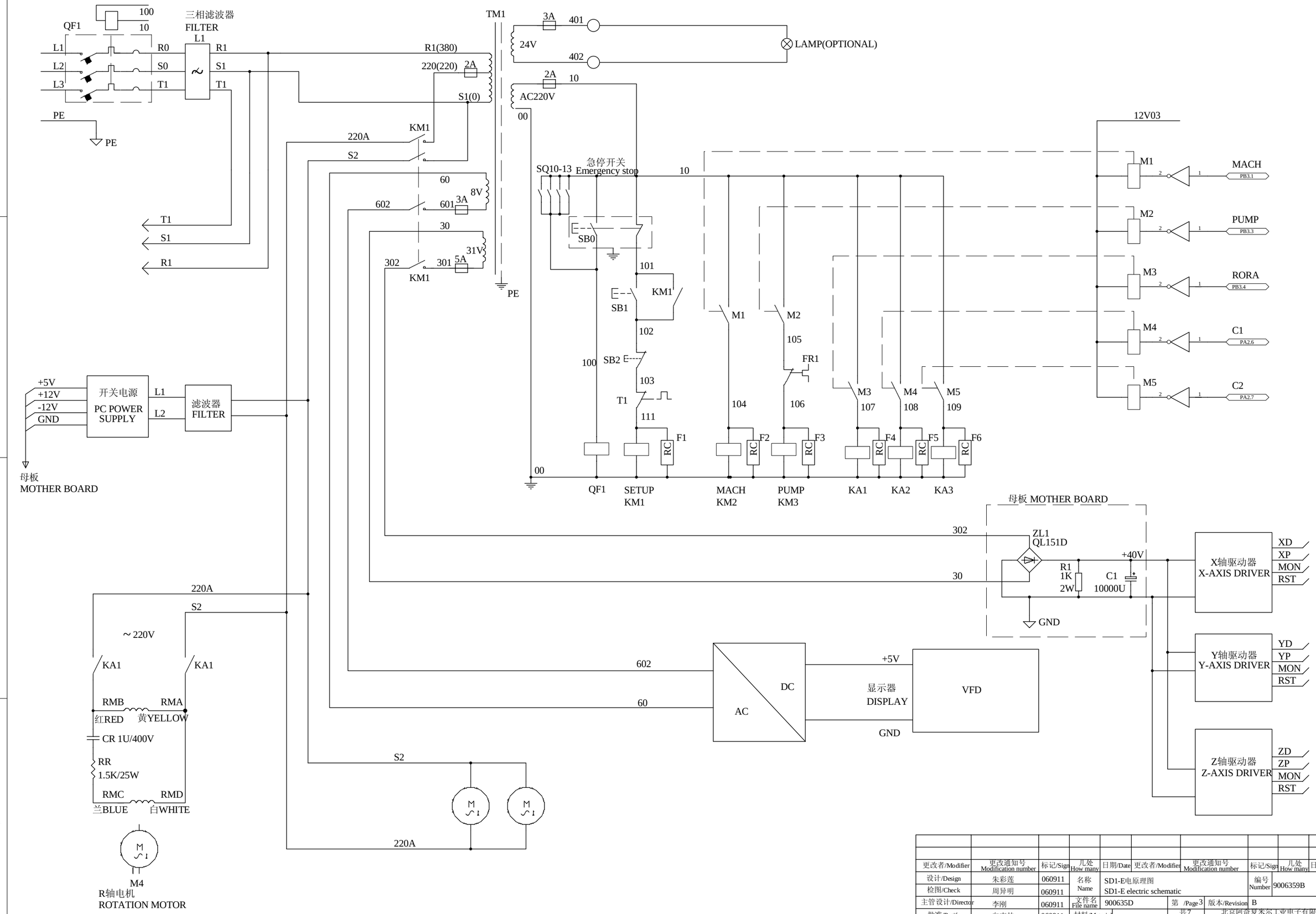

更改者/Modifier	更改通知号 Modification number	标记/Sign	几处 How many	日期/Date	更改者/Modifier	更改通知号 Modification number	标记/Sign	几处 How many	日期/Date
设计/Design	朱彩莲	060911	名称 Name	SD1-E电原理图 SD1-E electric schematic			编号 Number	9006359B	
检图/Check	周异明	060911							
主管设计/Director	李刚	060911	文件名 File name	900635D	第 /Page 3	版本/Revision	B		
批准/Ratify	向声林	060911	材料/Material		共7 page in all	北京阿奇夏米尔工业电子有限公司 BEIJING AGIE CHARMILLES			

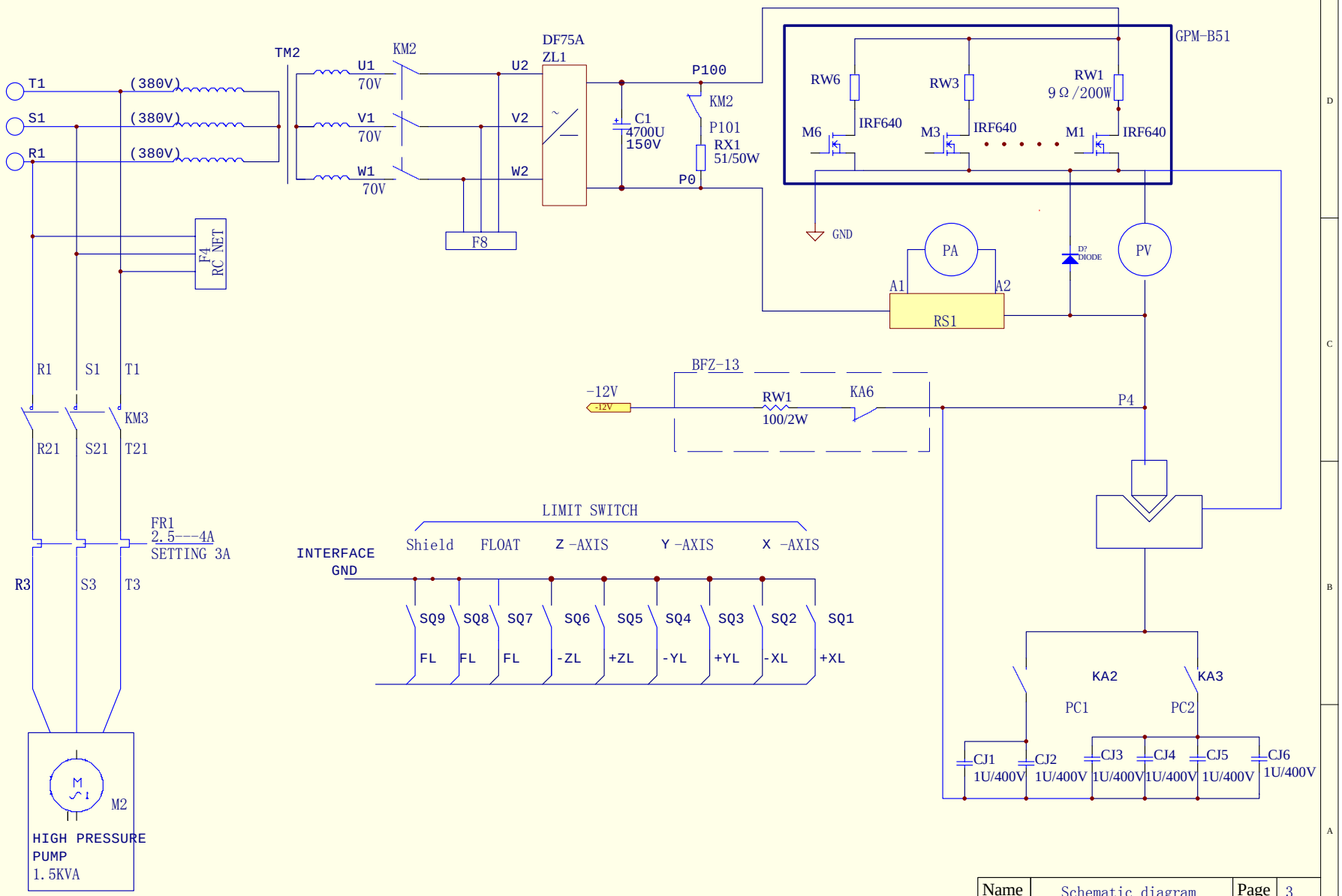

Name	Schematic diagram	Page	3
	SD1 Series Diagram	AI	A

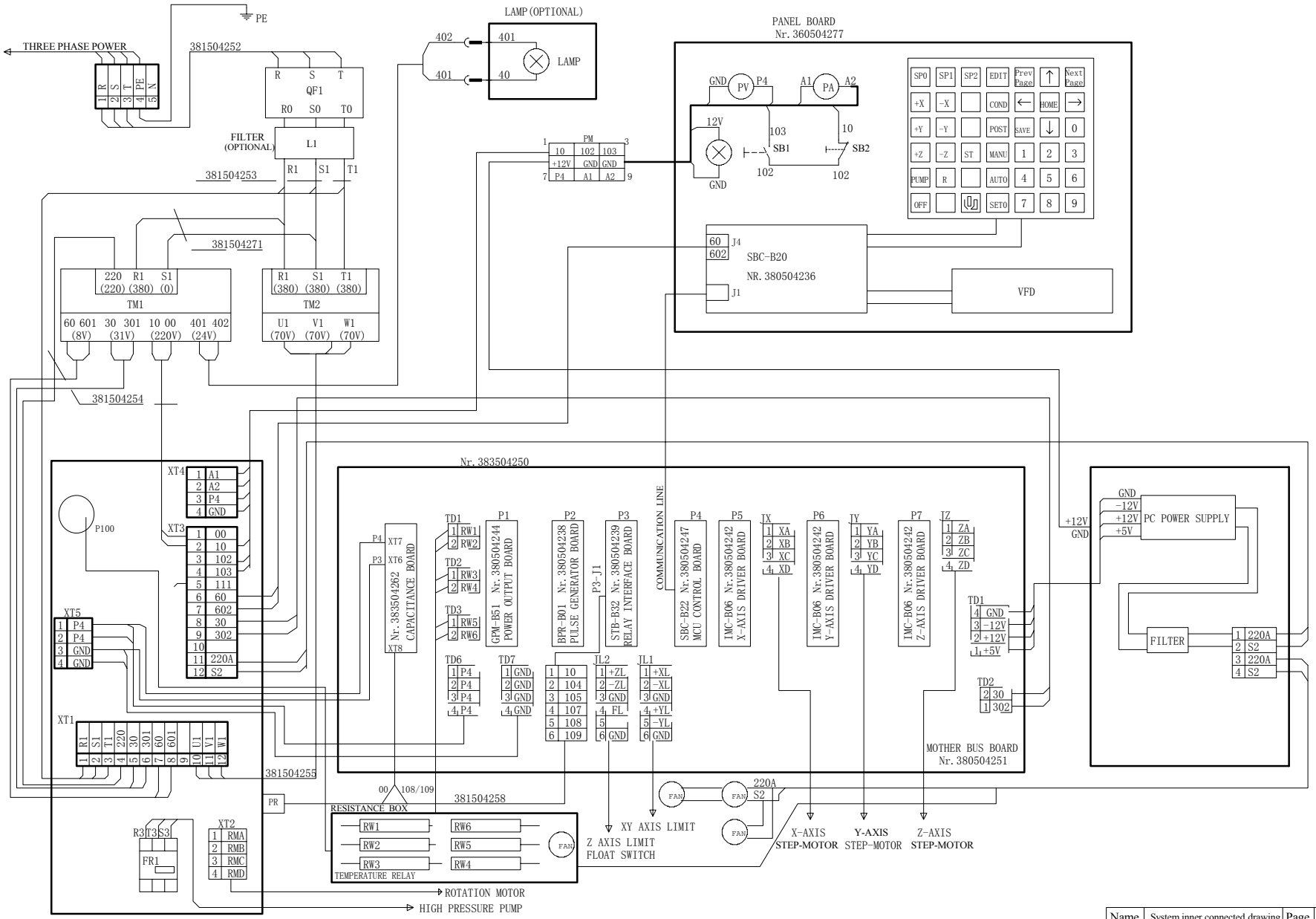

Name	System inner connected drawing	Page	4
SD1 Series Circuit Diagram		AI	A

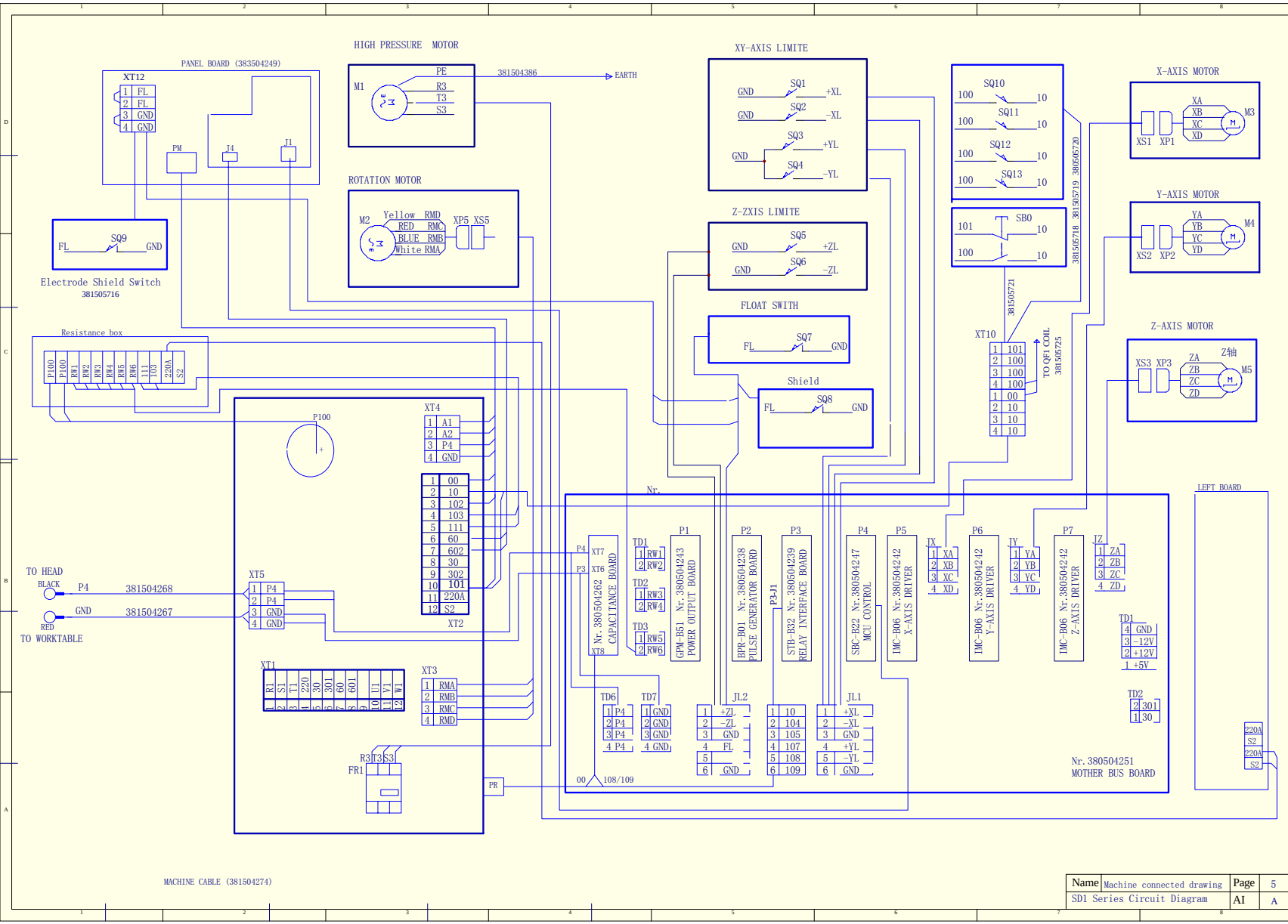

Name	Machine connected drawing	Page	5
SD1 Series Circuit Diagram		AI	A

P1

	B	A
1	RW1	GND
2	RW1	GND
3	RW1	I1
4	RW1	GND
5	RW1	GND
6	RW2	GND
7	RW2	GND
8	RW2	I2
9	RW2	GND
10	RW2	GND
11	RW3	GND
12	RW3	GND
13	RW3	I3
14	RW3	GND
15	RW3	GND
16	RW4	GND
17	RW4	GND
18	RW4	I4
19	RW4	GND
20	RW4	GND
21	RW5	GND
22	RW5	GND
23	RW5	I5
24	RW5	GND
25	RW5	GND
26	RW6	GND
27	RW6	GND
28	RW6	I6
29	RW6	GND
30	RW6	GND
31		GND

P2

	B	A
1	GND	GND
2	ONB	ONA
3	OND	ONC
4	ONF	ONE
5	ONH	ONG
6	OFFB	OFFA
7	OFFD	OFFC
8	OFFF	OFFE
9	OFFH	OFFG
10	-12V	-12V
11	+12V	+12V
12	+12V	+12V
13	+5V	+5V
14	+5V	+5V
15	+5V	+5V
16		
17	I2	I1
18	I4	I3
19	I6	I5
20		MACH
21		
22	IPA	
23	IPC	IPB
24		
25	I2	I1
26	I4	I3
27	I6	I5
28	SIG1	SIG0
29	SIG3	SIG2
30	SIG5	SIG4
31	SIG7	SIG6

P3

	B	A
1	GND	GND
2		
3		
4		
5		
6		
7		
8		
9		
10	-12V	-12V
11	+12V	+12V
12	+12V	+12V
13	+5V	+5V
14	+5V	+5V
15	+5V	+5V
16		
17		
18		
19		
20	PUMP	MACH
21	C1	ROTA
22		C2
23		
24	-XL0	+XL0
25	-YL0	+YL0
26	-ZL0	+ZL0
27		FL0
28		
29		
30		
31		

P4

	B	A
1	GND	GND
2	ONB	ONA
3	OND	ONC
4	ONF	ONE
5	ONH	ONG
6	OFFB	OFFA
7	OFFD	OFFC
8	OFFF	OFFE
9	OFFH	OFFG
10	-12V	-12V
11	+12V	+12V
12	+12V	+12V
13	+5V	+5V
14	+5V	+5V
15	+5V	+5V
16	XD	XP
17	YD	YP
18	ZD	ZP
19	RST	MON
20	PUMP	MACH
21	C1	ROTA
22	IPA	C2
23	IPC	IPB
24	-XL0	+XL0
25	-YL0	+YL0
26	-ZL0	+ZL0
27		FL0
28	SIG1	SIG0
29	SIG3	SIG2
30	SIG5	SIG4
31	SIG7	SIG6

P5

	B	A
1	+40V	+40V
2	+40V	+40V
3	XA	XA
4	XA	XA
5	XB	XB
6	XB	XB
7	AGND	AGND
8	AGND	AGND
9	AGND	AGND
10	-12V	-12V
11	+12V	+12V
12	+12V	+12V
13	+5V	+5V
14	+5V	+5V
15	+5V	+5V
16	XDR	XP
17		
18		
19	RST	MON
20		
21		
22		
23		
24		
25	+40V	+40V
26	+40V	+40V
27	+40V	+40V
28	XC	XC
29	XC	XC
30	XD	XD
31	XD	XD

P6

	B	A
1	+40V	+40V
2	+40V	+40V
3	YA	YA
4	YA	YA
5	YB	YB
6	YB	YB
7	AGND	AGND
8	AGND	AGND
9	AGND	AGND
10	-12V	-12V
11	+12V	+12V
12	+12V	+12V
13	+5V	+5V
14	+5V	+5V
15	+5V	+5V
16	YDR	YP
17		
18		
19	RST	MON
20		
21		
22		
23		
24		
25	+40V	+40V
26	+40V	+40V
27	+40V	+40V
28	YC	YC
29	YC	YC
30	YD	YD
31	YD	YD

P7

	B	A
1	+40V	+40V
2	+40V	+40V
3	ZA	ZA
4	ZA	ZA
5	ZB	ZB
6	ZB	ZB
7	AGND	AGND
8	AGND	AGND
9	AGND	AGND
10	-12V	-12V
11	+12V	+12V
12	+12V	+12V
13	+5V	+5V
14	+5V	+5V
15	+5V	+5V
16	ZDR	ZP
17		
18		
19	RST	MON
20		
21		
22		
23		
24		
25	+40V	+40V
26	+40V	+40V
27	+40V	+40V
28	ZC	ZC
29	ZC	ZC
30	ZD	ZD
31	ZD	ZD

	D	C
1	P4	GND
2	P4	GND
3	P4	GND
4	P4	GND
5	P4	GND
6	P4	GND
7	P4	GND
8	P4	GND
9	P4	GND
10	P4	GND
11	P4	GND
12	P4	GND
13	P4	GND
14	P4	GND
15	P4	GND
16	P4	GND
17	P4	GND
18	P4	GND

	D	C
1	P4	GND
2	P4	GND
3	P4	GND
4	P4	GND
5	GND	GND
6	GND	GND
7	GND	GND
8	GND	GND
9	GND	GND
10	GND	GND
11	GND	GND
12	GND	GND
13	GND	GND
14	GND	GND
15	GND	GND
16	GND	GND
17	GND	GND
18	GND	GND

	D	C
1	+ZL	+XL
2	-ZL	-XL
3	GND	GND
4	FL	+YL
5		-YL
6	GND	GND
7	GND	GND
8	GND	GND
9	GND	GND
10	GND	GND
11	GND	GND
12	GND	GND
13	GND	GND
14	GND	GND
15	GND	GND
16	GND	GND
17	GND	GND
18	GND	GND

	D	C
1	GND	GND
2	GND	GND
3	GND	GND
4	GND	GND
5	GND	GND
6	GND	GND
7	GND	GND
8	GND	GND
9	GND	GND
10	GND	GND
11	GND	GND
12	GND	GND
13	GND	GND
14	GND	GND
15	GND	GND
16	GND	GND
17	GND	GND
18	GND	GND

	D	C
1	GND	GND
2	GND	GND
3	GND	GND
4	GND	GND
5	GND	GND
6	GND	GND
7	GND	GND
8	GND	GND
9	GND	GND
10	GND	GND
11	GND	GND
12	GND	GND
13	GND	GND
14	GND	GND
15	GND	GND
16	GND	GND
17	GND	GND
18	GND	GND

	D	C
1	GND	GND
2	GND	GND
3	GND	GND
4	GND	GND
5	GND	GND
6	GND	GND
7	GND	GND
8	GND	GND
9	GND	GND
10	GND	GND
11	GND	GND
12	GND	GND
13	GND	GND
14	GND	GND
15	GND	GND
16	GND	GND
17	GND	GND
18	GND	GND

	D	C
1	GND	GND
2	GND	GND
3	GND	GND
4	GND	GND
5	GND	GND
6	GND	GND
7	GND	GND
8	GND	GND
9	GND	GND
10	GND	GND
11	GND	GND
12	GND	GND
13	GND	GND
14	GND	GND
15	GND	GND
16	GND	GND
17	GND	GND
18	GND	GND

TD3

1	RW1
2	RW2

TD4

1	RW3
2	RW4

TD5

1	RW5
2	RW6

TD6

1	P4
2	P4
3	P4
4	P4

TD7

1	GND
2	GND
3	GND
4	GND

JL2

1	+ZL
2	-ZL
3	GND
4	FL
5	
6	GND

JL1

1	+XL
2	+XL
3	GND
4	+YL
5	-YL
6	GND

JX

1	XA
2	XB
3	XC
4	XD

JY

1	YA
2	YB
3	YC
4	YD

JZ

1	ZA
2	ZB
3	ZC
4	ZD

P3-J1

1	10	2	104
3	105	4	107
5	108	6	109

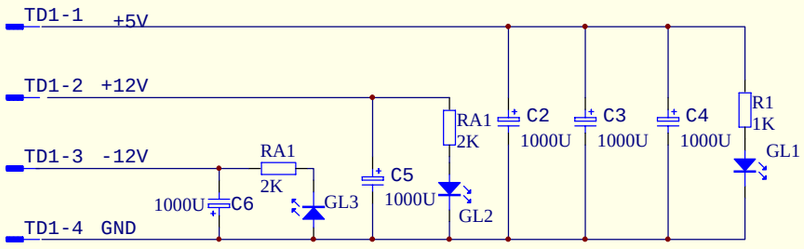

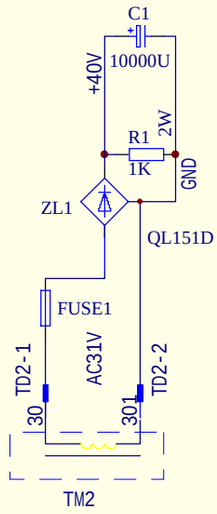

Name	Mother board bus diagram	Page
SD1 Series Circuit Diagram		AI

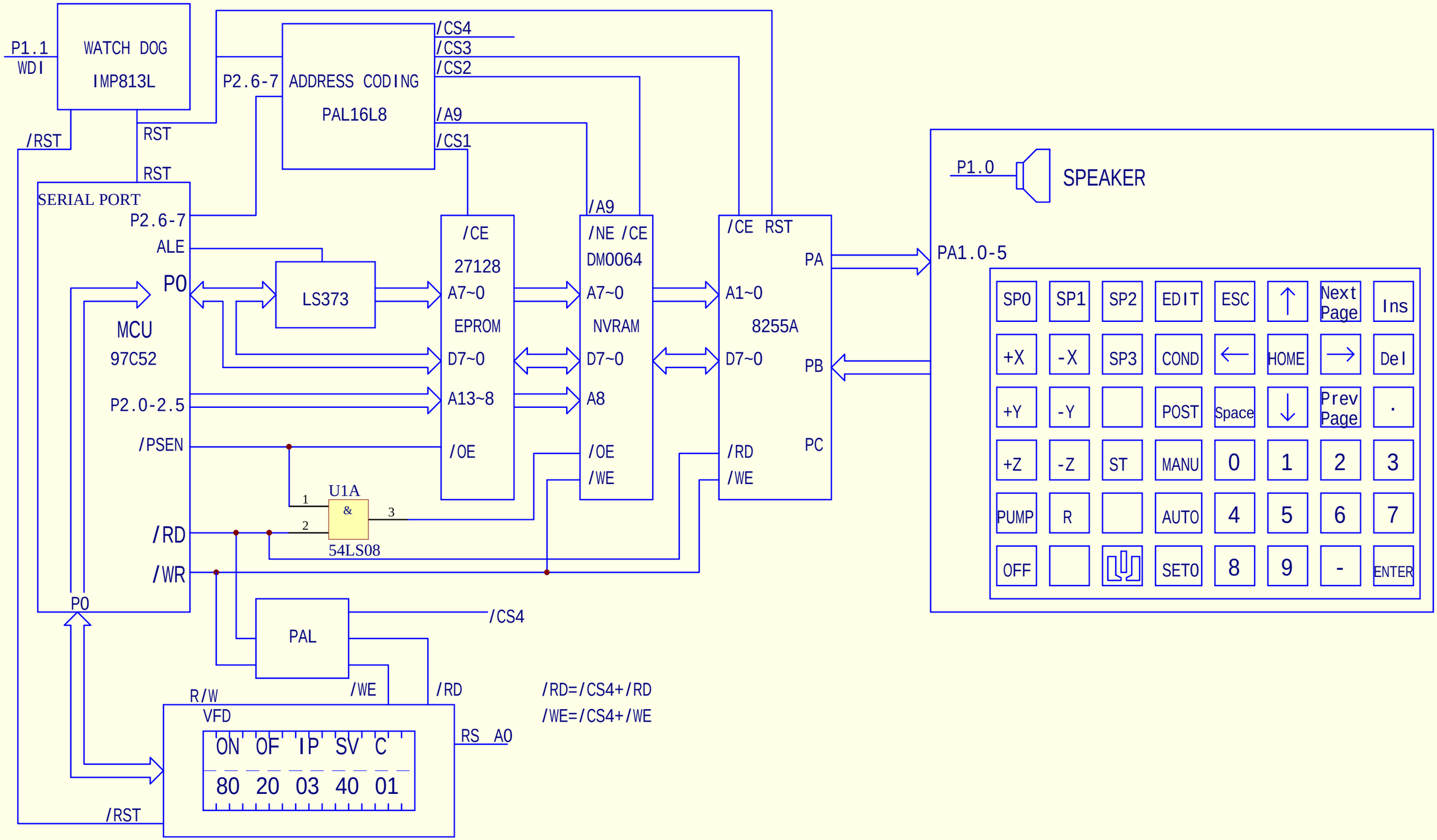

Nam	Main control systemschematic diagram	Page	7
SD1 Series Circuit Diagram		AI	A

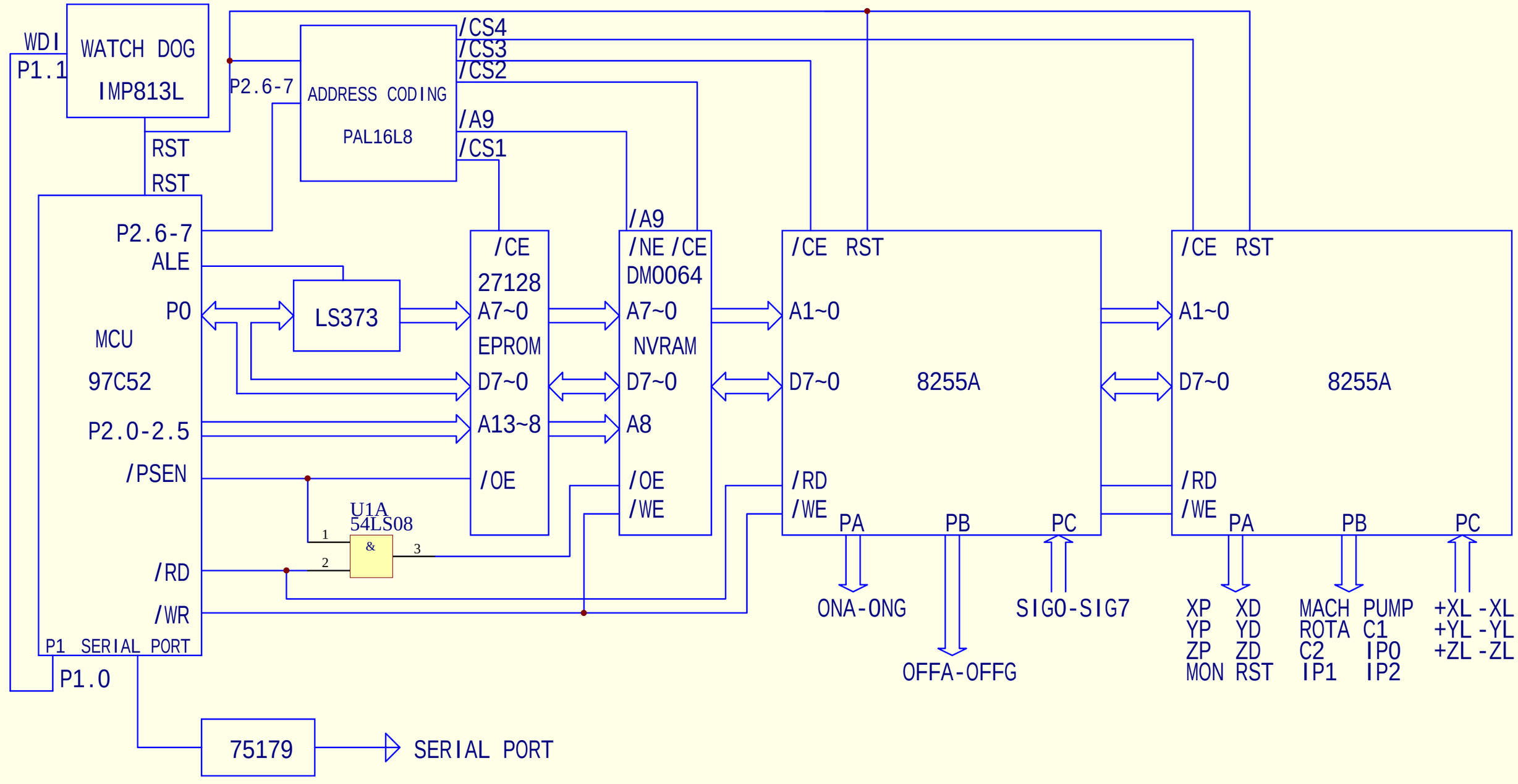

Nam	Control system schematic diagram	Page	8
SD1 Series Circuit Diagram		AI	A

A

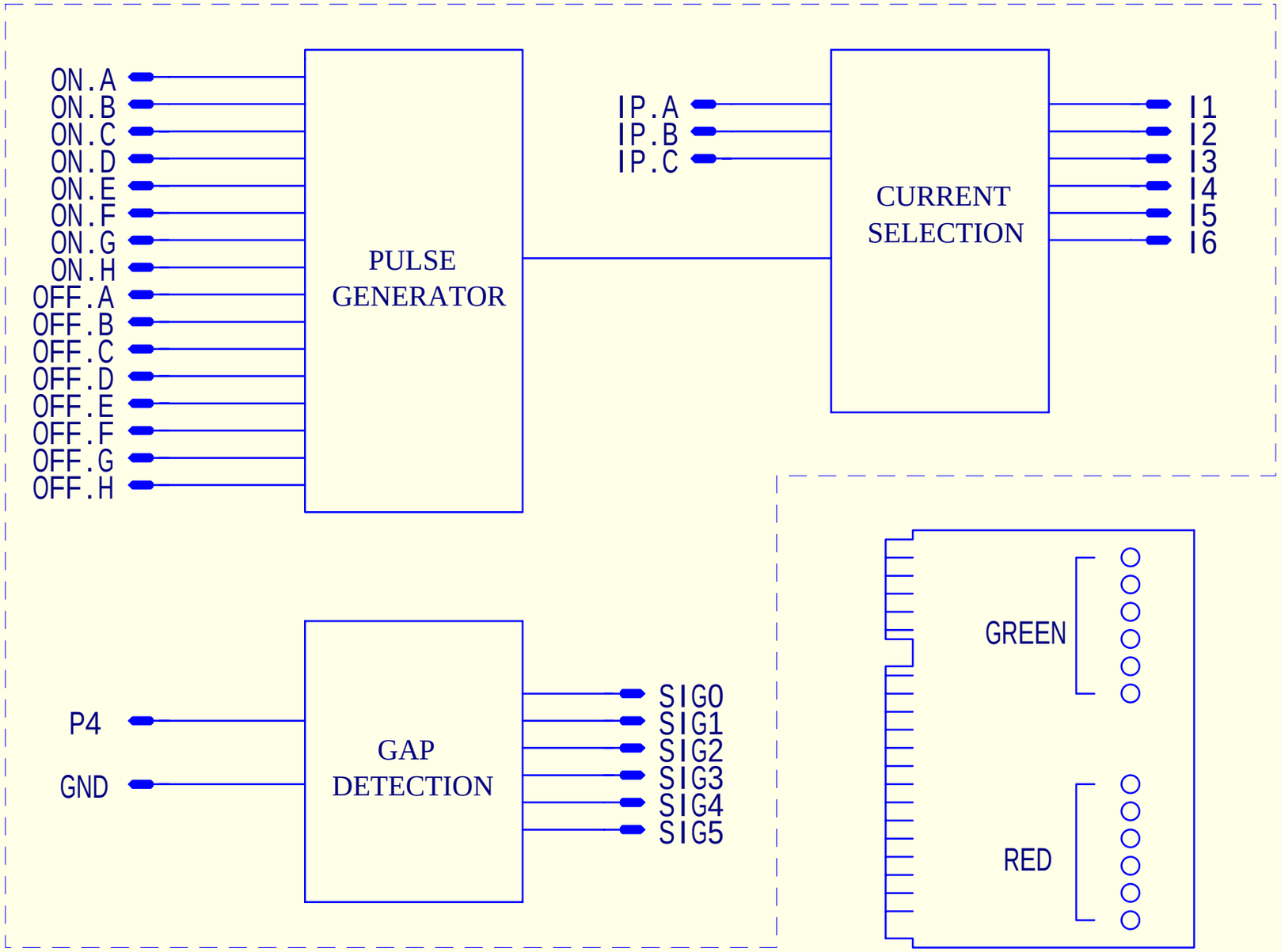

P2-J1

	B	A
1	GND	GND
2	ON.B	ON.A
3	ON.D	ON.C
4	ON.F	ON.E
5	ON.H	ON.G
6	OFF.B	OFF.A
7	OFF.D	OFF.C
8	OFF.F	OFF.E
9	OFF.H	OFF.G
10	-12V	-12V
11	+12V	+12V
12	+12V	+12V
13	+5V	+5V
14	+5V	+5V
15	+5V	+5V
16		
17		
18		
19		
20		MACH
21		
22	IP.A	
23	IP.C	IP.B
24		
25	I2	I1
26	I4	I3
27	I6	I5
28	SIG1	SIG0
29	SIG3	SIG2
30	SIG5	SIG4
31	SIG7	SIG6

	D	C
1	P4	GND
2	P4	GND
3	P4	GND
4	P4	GND
5	GND	GND
6	GND	GND
7	GND	GND
8	GND	GND
9	GND	GND
10	GND	GND
11	GND	GND
12	GND	GND
13	GND	GND
14	GND	GND
15	GND	GND
16	GND	GND
17	GND	GND
18	GND	GND

LED(GREEN):The greater the SV value is, the more the lit LED's are.

LED(RED):Each LED stands for a power tube and a lit LED means a power tube in use.

Nam	BPR-B01 pulse generated board schematic diagram	Page	9
SD1 Series Circuit Diagram		AI	A

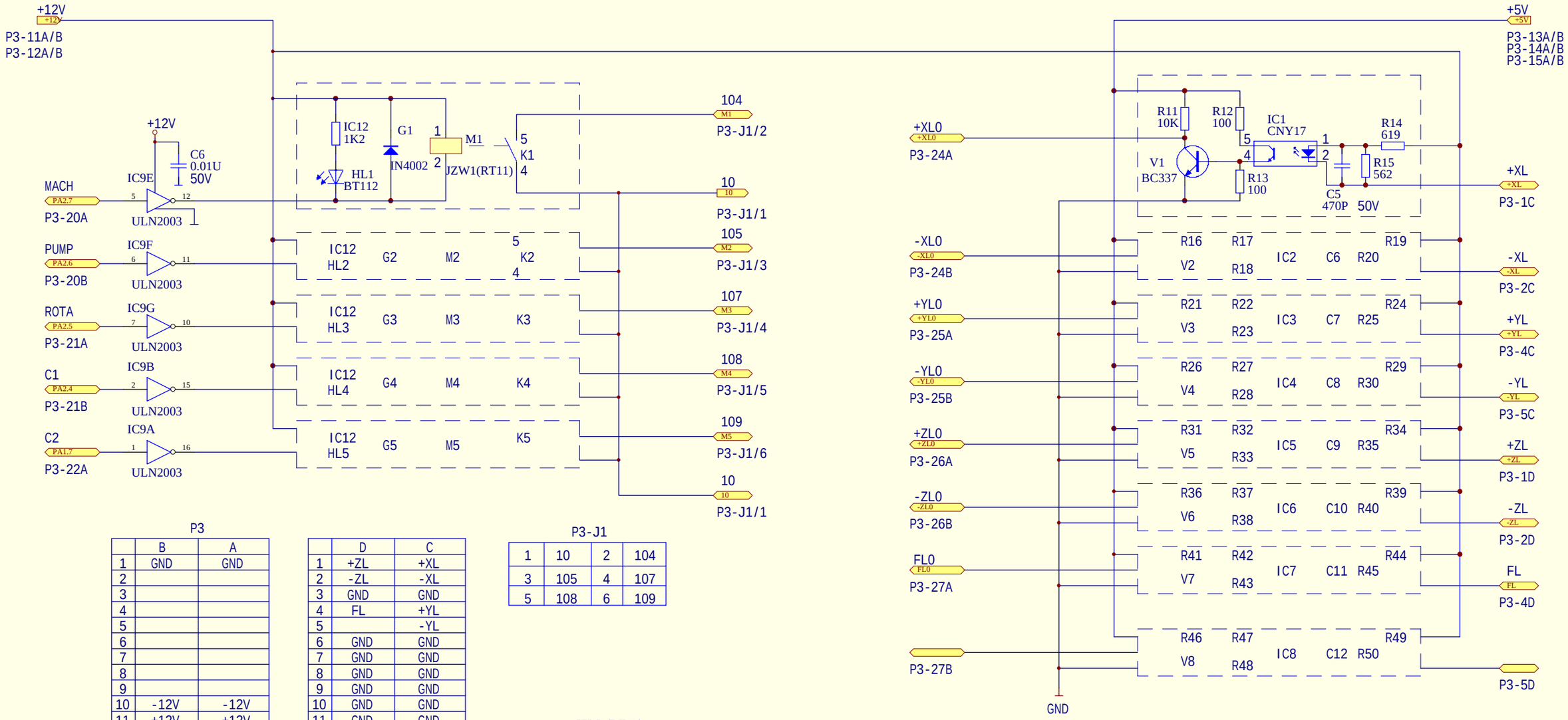

P3

	B	A
1	GND	GND
2		
3		
4		
5		
6		
7		
8		
9		
10	-12V	-12V
11	+12V	+12V
12	+12V	+12V
13	+5V	+5V
14	+5V	+5V
15	+5V	+5V
16		
17		
18		
19		
20	PUMP	MACH
21	C1	ROTA
22		C2
23		
24	-XL0	+XL0
25	-YL0	+YL0
26	-ZL0	+ZL0
27		FL0
28		
29		
30		
31		

	D	C
1	+ZL	+XL
2	-ZL	-XL
3	GND	GND
4	FL	+YL
5		-YL
6	GND	GND
7	GND	GND
8	GND	GND
9	GND	GND
10	GND	GND
11	GND	GND
12	GND	GND
13	GND	GND
14	GND	GND
15	GND	GND
16	GND	GND
17	GND	GND
18	GND	GND

P3-J1

1	10	2	104
3	105	4	107
5	108	6	109

JZW1(RT11)

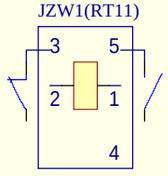

Name	STB-B32 relay board schematic diagram	Page
SD1 Series Circuit Diagram		AI

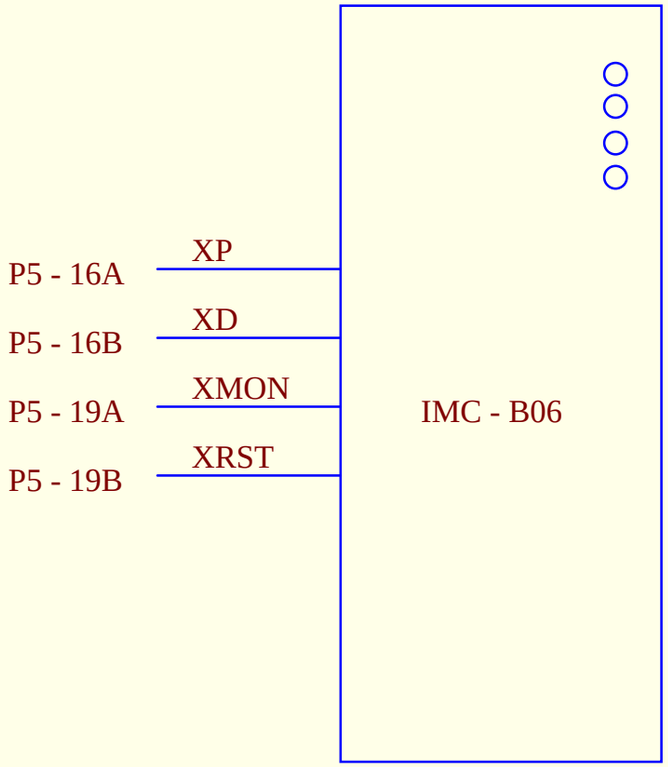

SIGNAL	FUNCTION
XP	PULSE
XD	DIRECTION
XMON	0:MOTOR NOT EXCITATION 1:MOTOR EXCITATION
XRST	0:RESET 1:EFFECTIVE

LED SHOW EXPLANATION

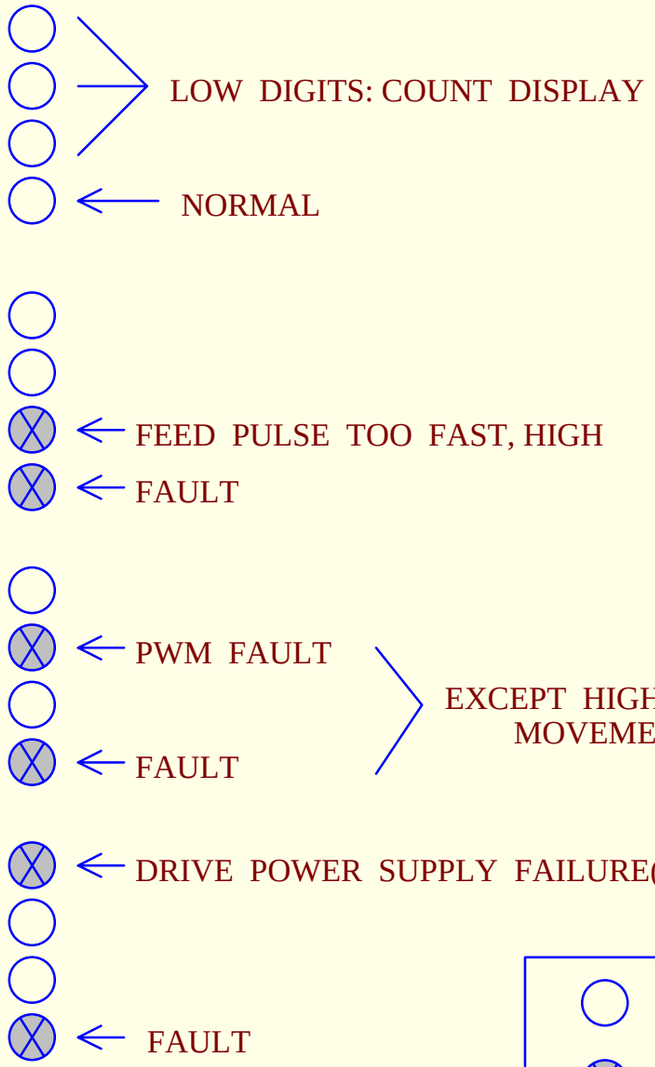

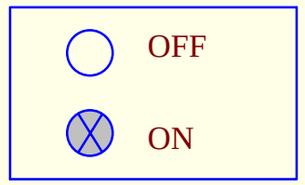

Signal interface of X-axis,Y-axis and Z-axis motor driver are same,LEDs explanation are same,too.

Nam	IMC-B06 X-axis motor driver	Page	11
SD1 Series Circuit Diagram		AI	A

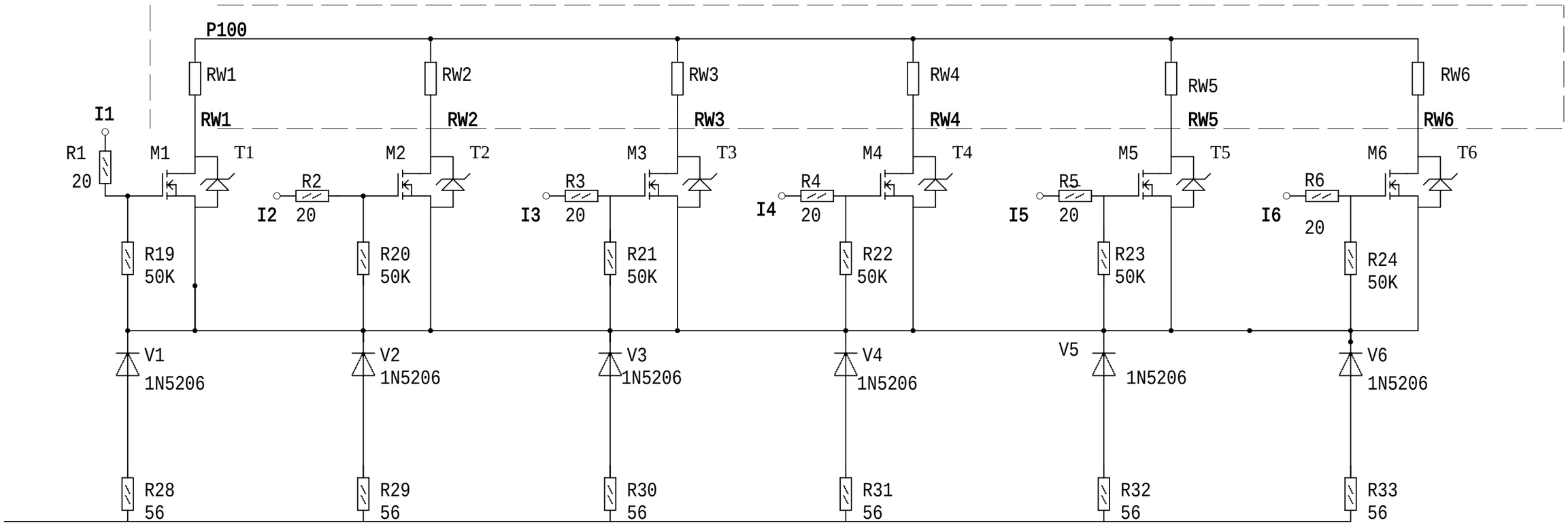

A	B
I1	I2
I3	I4
I5	I6
I7	I8
I9	I10
IH	
P3	P4
P3	P4

CODE	TYPE
M1-M10	IRF740
RW1-RW10	10Ω/200W

特性分级	特 性 内 容 及 要 求

更改者	更改通知号	标记	几处	日期	更改者	更改通知号	标记	几处	日期
设计	王宇衡	05.10.13	名称	GPM-B51B 功率放大板		编号	360504243	版本	B
检图	张宏	05.10.13							
主管设计	周异明	05.10.13	文件名	360504243	第1	重量		比例	
批准	李刚	05.10.13	材料		共2	北京阿奇夏米尔工业电子有限公司			

On the SBC-B20 installed in operation_box

LED1
- ○ light is off,means OK.
- ⊗ light is on,means cpu is not working, it's wrong 。

On the SBC-B22 installed in control_box

LED1
- ○ light is off,means OK.
- ⊗ light is on,means cpu is not working, it's wrong 。

On the STB-B32 installed in control_box

HL5	○	light is off,means OK.
	⊗	light is on,means capacitor_c1 specified by parameter C is in main_circuit.
HL4	○	light is off,means OK.
	⊗	light is on,means capacitor_c2 specified by parameter C is in main_circuit.
HL3	○	light is off,means OK.
	⊗	light is on,means the relay which control rotation_axis_R is closed
HL2	○	light is off,means OK.
	⊗	light is on,means the relay which control pump is closed
HL1	○	light is off,means OK.
	⊗	light is on,means the relay which control main power of pulse is closed

On the BPR-B01 installed in control_box

red

The number of lights on is equal to value of parameter IP.

- HL6 ○
- HL5 ○
- HL4 ○
- HL3 ○
- HL2 ○
- HL1 ○

green

used to indicate voltage of gap.
during the maching, lights flash.

- HL12 ○
- HL11 ○
- HL10 ○
- HL9 ○
- HL8 ○
- HL7 ○

If it is on, -12V OK LED3 ○
If it is on, +12V OK LED2 ○
If it is on, +5V OK LED1 ○

With all of three lights on,power is OK.
With one of three lights off , DC power is wrong.
Mother Board_BAB-B32

Nam	Meaning of Indicated Light	Page	13
SD1 Series Circuit Diagram		AI	A

若泵过载或过滤水箱没水，则蜂鸣器报警
Buzzer sounds, if pump (M1) overloads or there is no water in filtration tank .

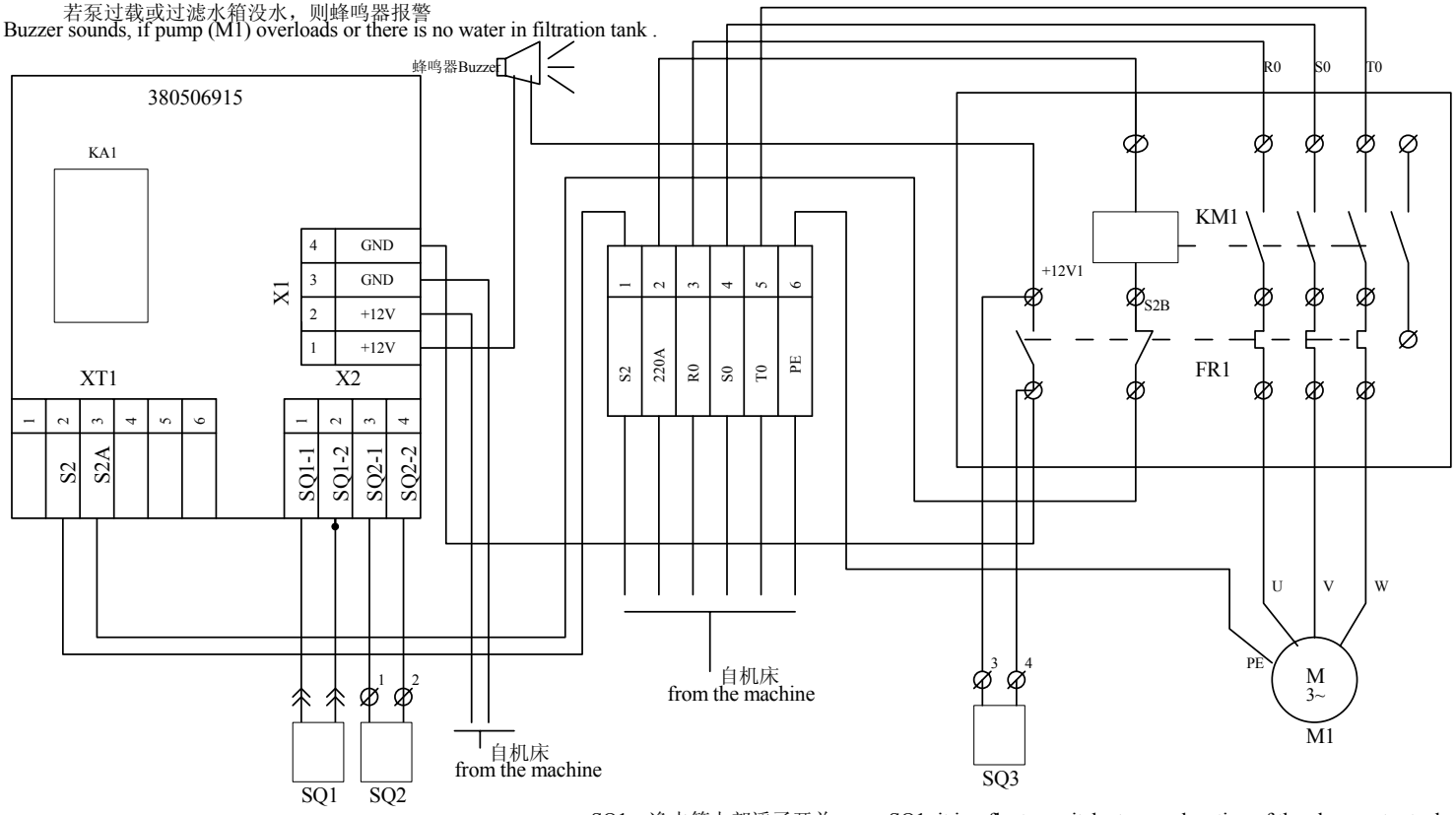

SQ1：净水箱上部浮子开关　　SQ1: it is a floater switch at upper location of the clean water tank;
SQ2：过滤水箱底部浮子开关　　SQ2: it is a floater switch at lower location of the filtration water tank;
SQ3：过滤水箱上部浮子开关　　SQ3: it is a floater switch at upper location of the filtration water tank;

Nam	Filter System	Page	1
	SD1 Series Circuit Diagram	AI	A

1	2	3	4	5	6	7	8